OPERATING, INSTALLATION AND MAINTENANCE MANUAL

GRANITE WARMER DROP IN

(REF DIC1_DIC2_DIC3_DIC4)

GENERAL PRODUCT DESCRIPTION

The Warmer Drop-In maintains temperatures with built-in granite on top. Electrically powered by a voltage of 230V ~ 50Hz +earth.

REF	**Unit Dimension**				**Electrical Spec**	
	width without panels (mm)	depth (mm)	height (mm)	weight (kg)	Voltage power. (V)	Electrical Power (kw)
DIC1	610	510	131	23	230-50Hz	0.8
DIC2	760	510	131	29	230-50Hz	1
DIC3	760	610	131	34	230-50Hz	1.2
DIC4	915	610	131	41	230-50Hz	1.6

The device is for professional use and should be used by qualified personnel.

Before starting any operation, please read the instructions carefully.

Retain this manual for future reference.

Changes to the facilities to accommodate the machine should be part of the user expenses.

The wiring should be done by a qualified electrician in accordance with local electrical code. A properly wired and grounded outlet will assure proper operation.

Interventions on the electrical parts must be performed by qualified personnel in the compliance with standards.

The company is not liable for damages if:

• incorrect use of the device
• non-compliance with standards
• incorrect installation
• non compliance with guidance on maintenance
• unauthorized modification
• Installation of non-original spare parts
• Installation and use of the module different than those provided by the manufacturer
The plate is located below the module.

BASIC COMPOSITION

• Plan presentation Granite Top.
• Embedding a slab temperature maintenance aluminum equipped resistance "fabric heating "system with height adjustment.
• remote control box with built-in switch, digital display and electronic control temperature.
• Flexible Conduit 1 m stainless steel.

2. INSTALLATION

Before connecting and starting up the hot module, please ensurethat bookings power are made.

This work shall be borne by the client user, who must enforce, by companies approved, close to the location of the device.

2.1. INTRODUCTION

UNPACKING

Unpack the module that is surrounded, shot and set on pallet.
Dispose of packaging according to the standards.

2.1.1 DIMENSIONS TOP PLATED GRANITE

DIC1 and DIC2

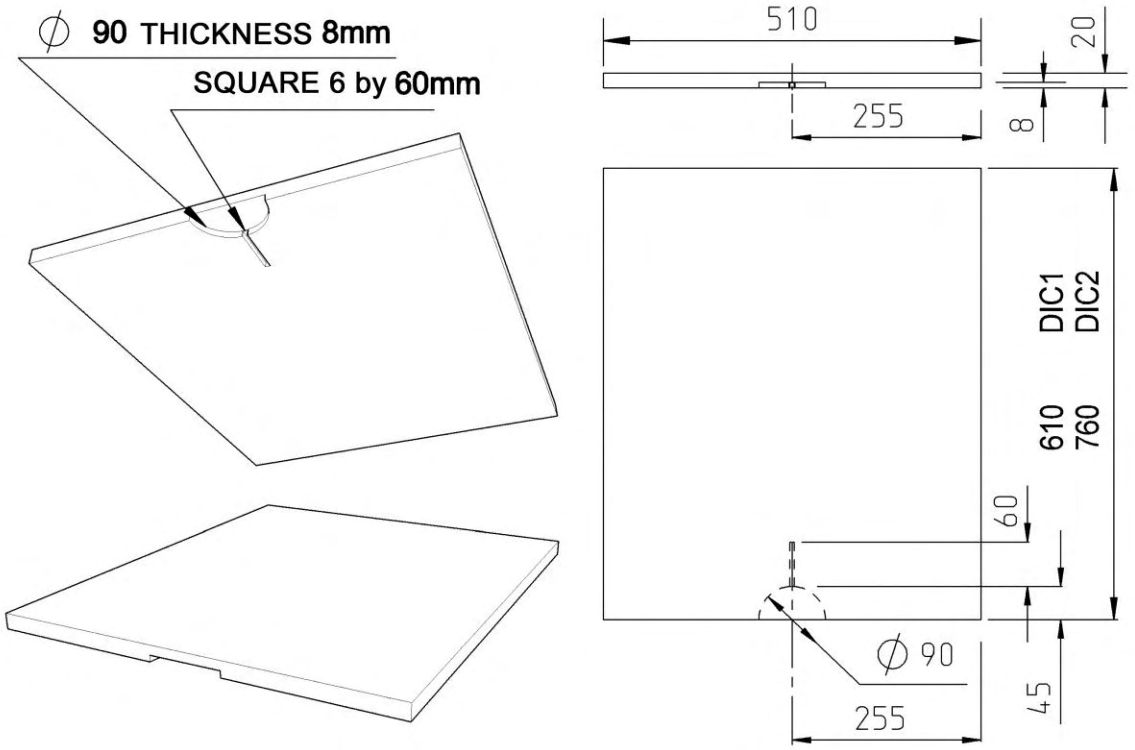

DIC3 and DIC4

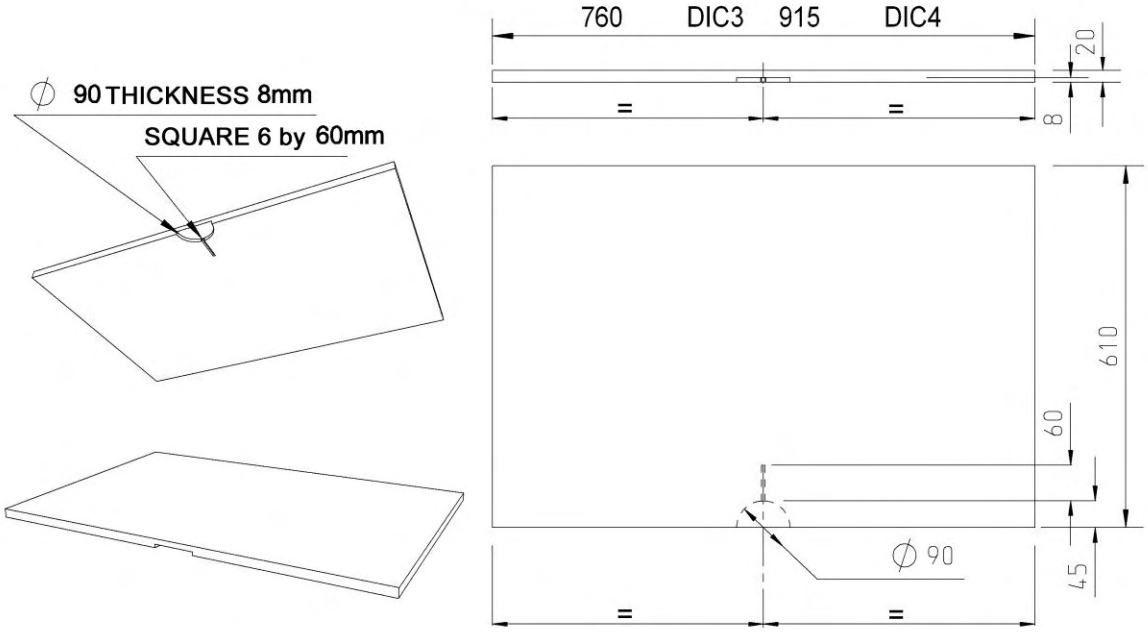

HOT DROP-IN MODULE ASSEMBLY ON STAINLESS PLAN AND STAINLESS OUTLINE

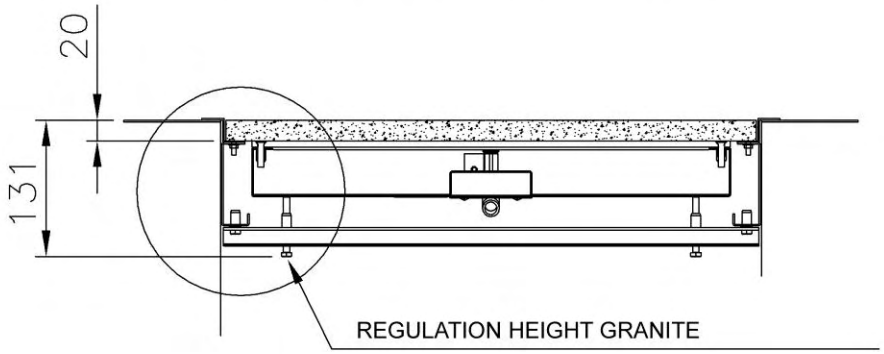

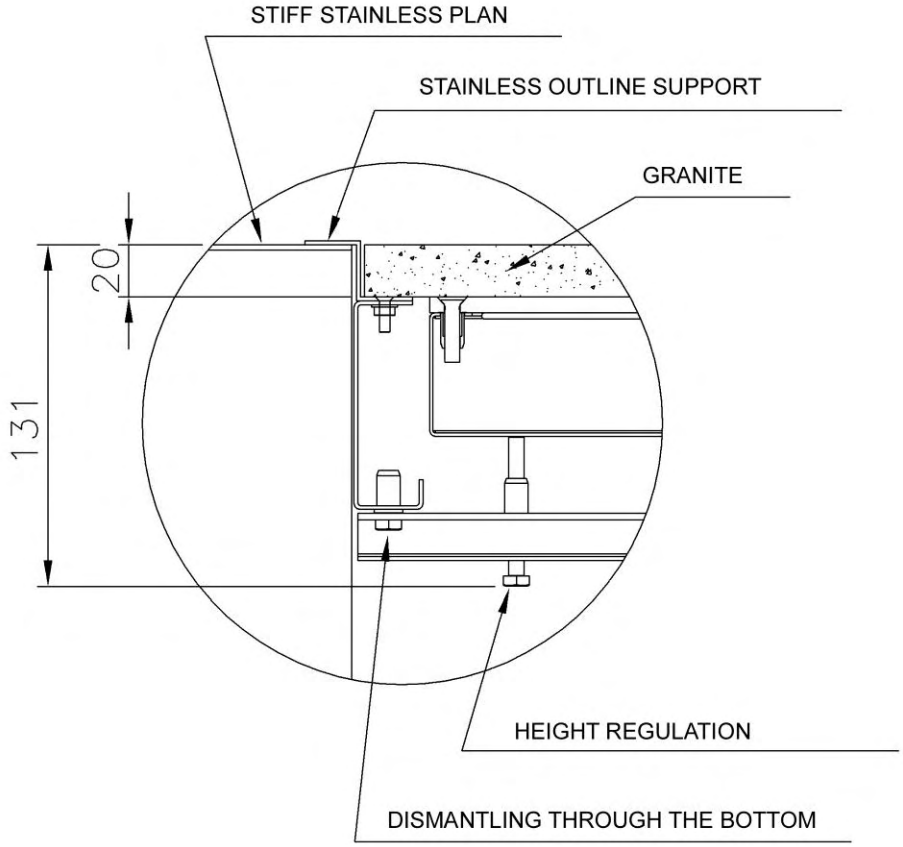

HOT DROP-IN MODULE ASSEMBLY ON STAINLESS PLAN WITH GRANITE AND STAINLESS OUTLINE

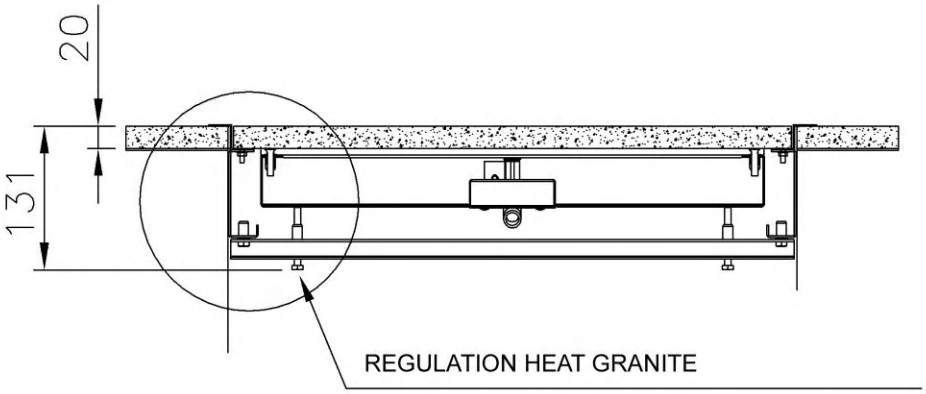

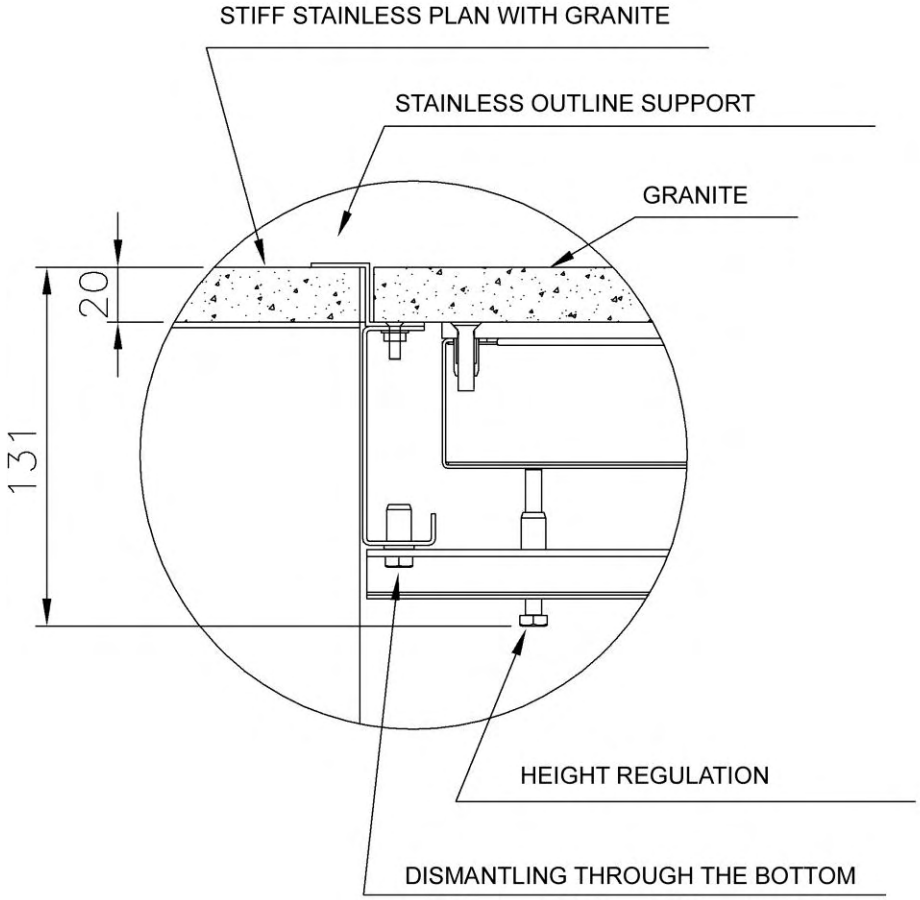

HOT DROP-IN MODULE
ASSEMBLY ON STAINLESS PLAN
WITH GRANITE AND SILICONE JOINT

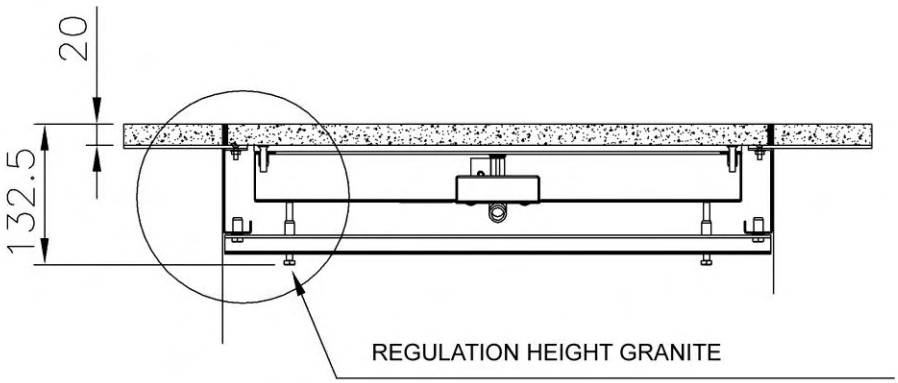

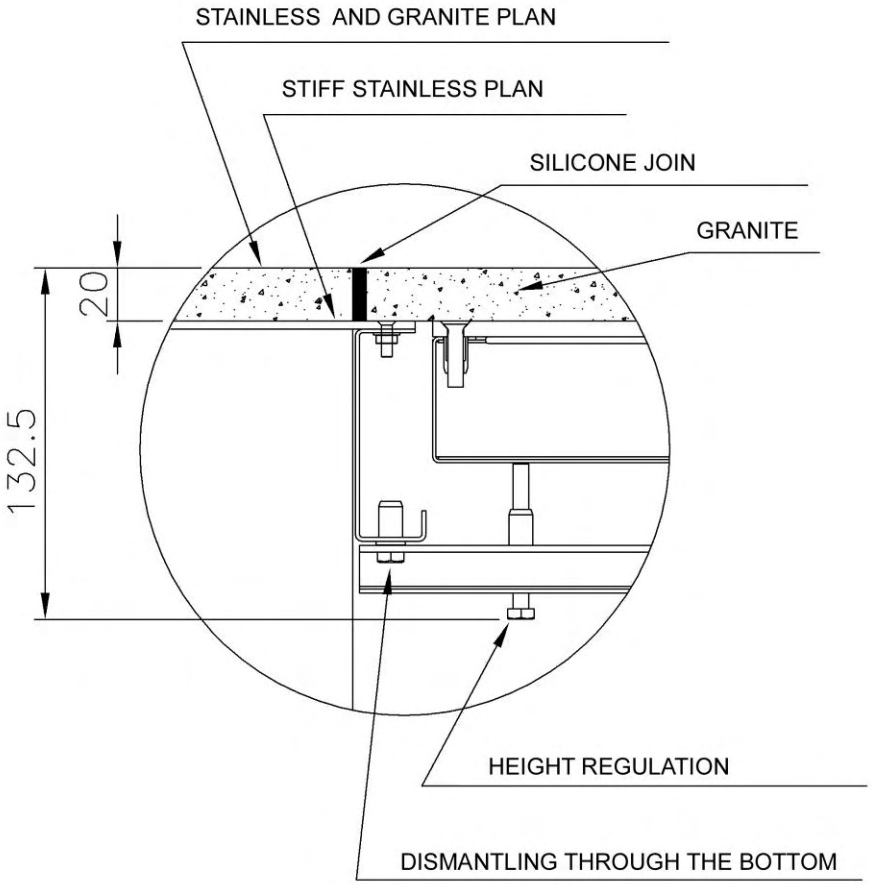

2.1.3. Reservation not supplied with the case of command on piece of furniture

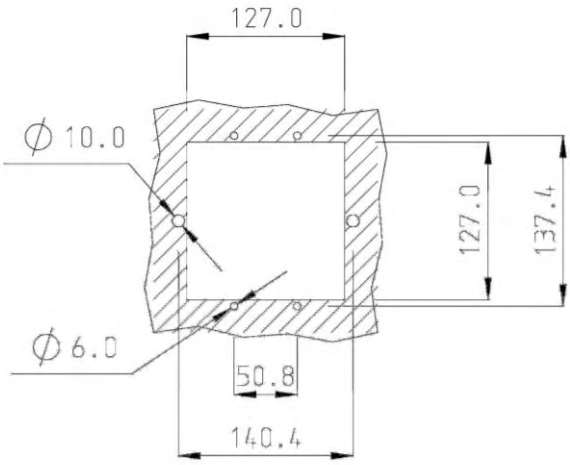

2.2. ELECTRICAL CONNECTION

Power supply: 230V single phase + neutral + earth.
Check that the mains voltage corresponds with electrical characteristics listed on the plate.
In any case, connect the earth.

3. USE

3.1. RECOMMENDATIONS

• Every night, ensuring that the plates are clean, and there is no product in terms of presentation after you are assured of complete shutdown of the unit.

3.2. DIGITAL THERMOSTAT

4. Cleaning – maintenance

4.1 cleaning

- Clean your hot module after each utilization day with a non abrasive detergent.

4.2 Maintenance contract

- For a better service, we advise you a periodic technical visit with a technician.

5. Checking of the material

The products shipped at the customer's risks and dangers. He falls to him as addressee to give the order to the carrier to unload the material only bitter to be to assure of the good state of the delivered equipment. The indistinct reserves such as «subject to unpacking " and " Subject to control of quality or quantity " don't have legal values.

At the reception of the goods, it is necessary to proceed as follows:

- Check in presence of the deliverer, the conditions, the quality, the quantity of books products, even if the packaging countered outside in good condition. If there are reserves, they have to be precisely on the voucher of the carrier.
- If the carrier doesn't accept to be present for the control, write on the delivery voucher "Refusal of the carrier to attend the unpacking" and say it to the responsible of the transport company.
- The reserves must be confirm at the carrier within next 3 days, with a register mail with a report, **and copy at Rotisol**

The non respect of this procedure removes the responsibility of the transport company and of Rotisol.

6. warranty

Rotisol warranty is for 12 month at the invoice date.

In case of manufacturing defect, there is an exchange or reparation of the defects products.
The exchange of parts under warranty obliges the buyer to provide a copy of the invoice of the material.

The cost and the shipping risk, the expenses of dismantling-reassembly, the parts and the reparation expenses (people, material and stay) are chargeable to the buyer.

The warranty do not cover the imperfections which would come of the non respect of the installation, of utilization and of the maintenance, or of the non respect of standards, of a foreign cause of the product (bad installation, plug-in mistakes, surge, lightning etc…), of abnormal use and modification or intervention of the buyer or someone else.

The following parts are out of the warranty: lamp, windows, glass, quartz and halogen, granite, lights and joint. **We advise our clients to take a "breaking of windows "insurance.**

To have the warranty, all the faulty parts must be return in a delay of 8 days. The parts under warranty are sent upon reimbursement. The shipping is pay by the customer and the parts are reimbursed at the reception of the faulty parts after a control of our warehouse. The products replaced with a warranty are for the remaining time under initial warranty.

After the 12 month warranty, all new part shipped or replaced will be charge of shipping fees or workforce and travel. The part will be guarantee 3 month after the invoicing date.

In case of dispute, the customer must provide the original invoice, without this document there is no warranty.

A technical assistance of Rotisol is the object of an estimate and a client invoicing

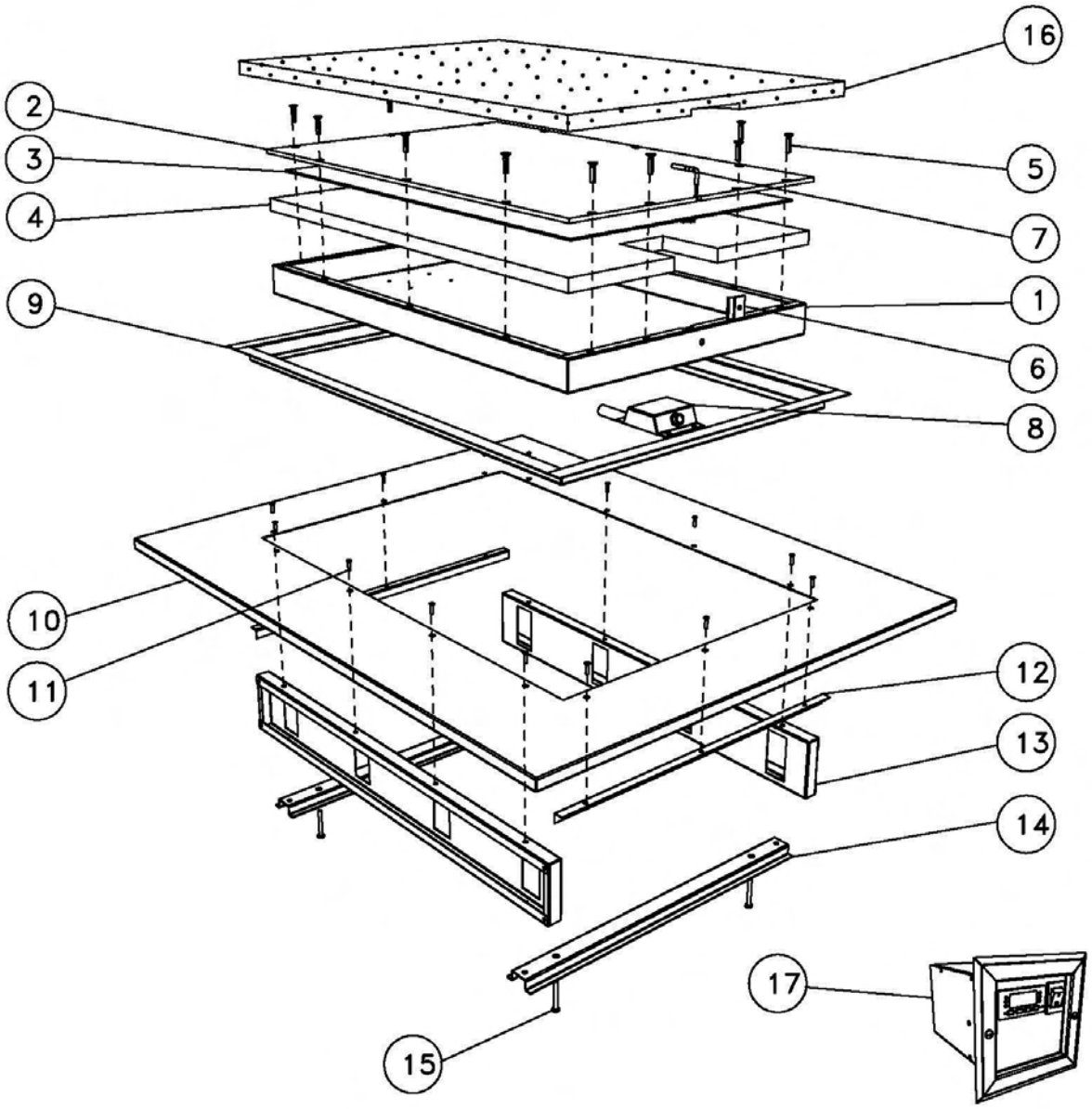

MODULE DROP-IN CHAUD DIC1/DIC2/DIC3/DIC4
ECLATE INTEGRATION TABLE INOX
AVEC SUPPORT CONTOUR INOX

Rotisol

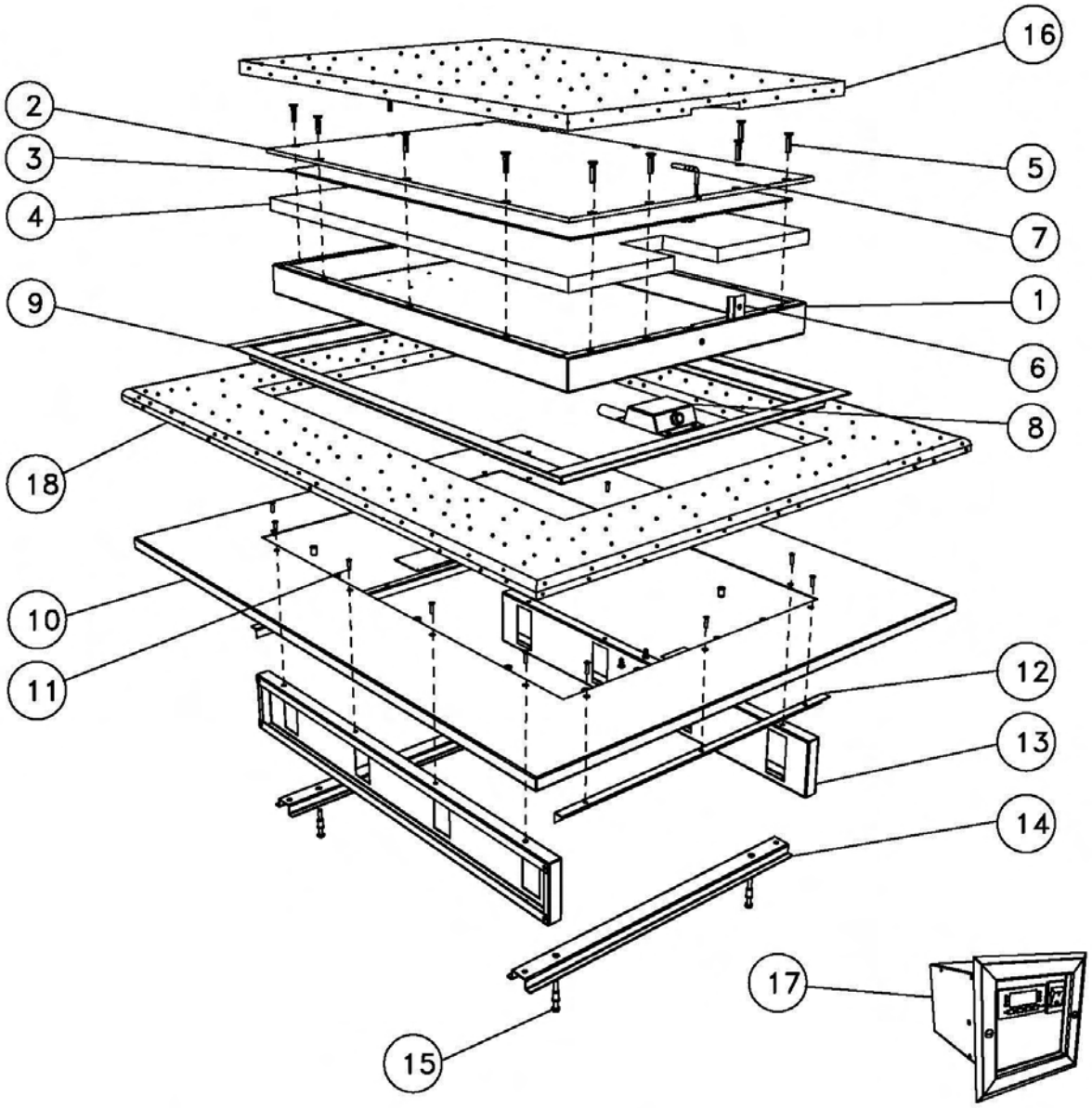

MODULE DROP-IN CHAUD DIC1/DIC2/DIC3/DIC4
ECLATE INTEGRATION PLATEAU GRANITE
AVEC SUPPORT CONTOUR INOX

Rotisol

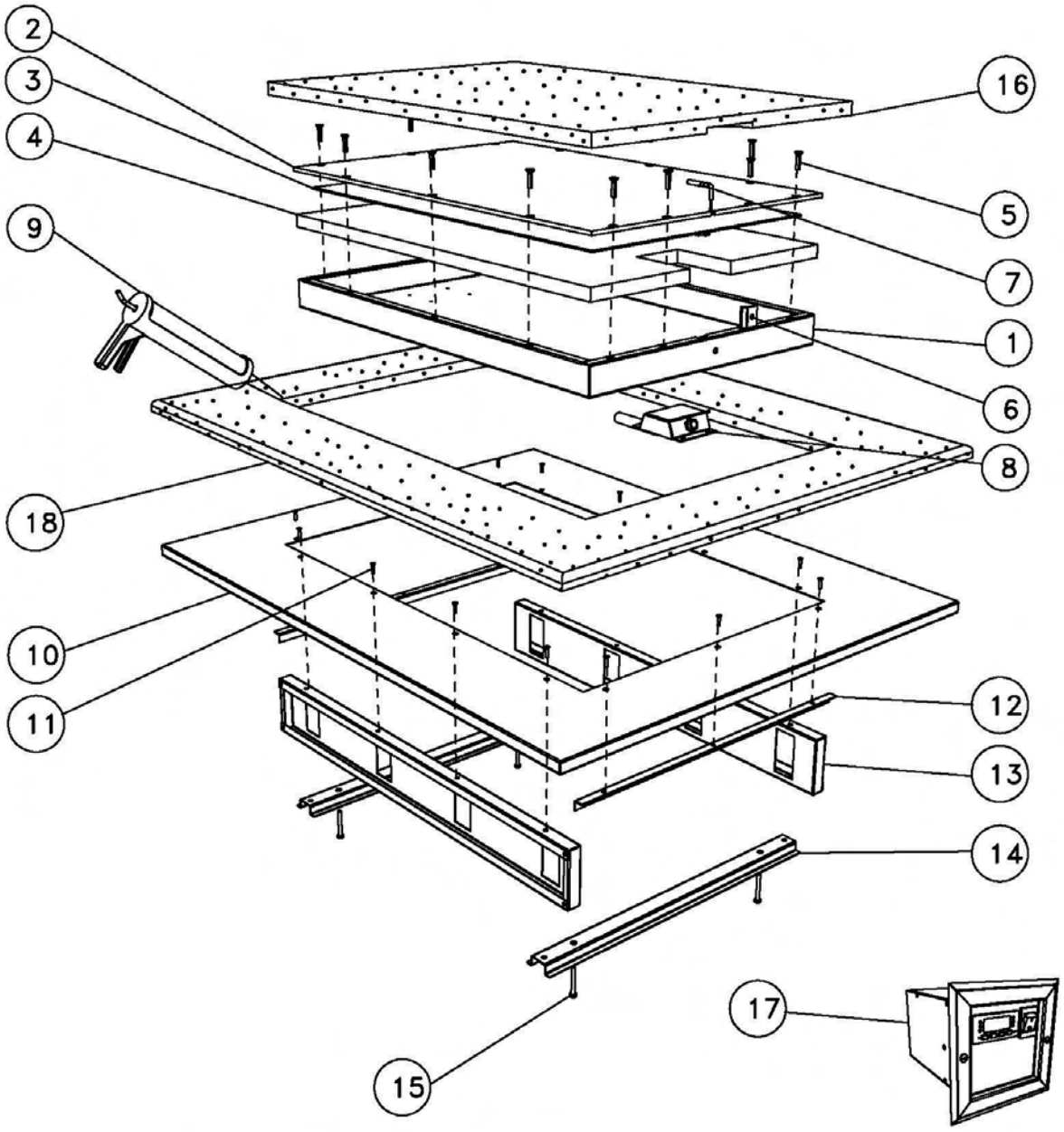

MODULE DROP-IN CHAUD DIC1/DIC2/DIC3/DIC4
ECLATE INTEGRATION PLATEAU GRANITE
AVEC CONTOUR SILICONE

Rotisol